E4028 VERSA-PVC DETAIL SHEET

MEETS: IAPMO IGC 195-2013a & ASME A112.18.2 /CSA B125.2 STANDARDS

THE INFORMATION CONTAINED IN THIS DRAWING IS THE SOLE PROPERTY OF EBBE AMERICA LC.. ANY REPRODUCTION IN PART OR AS A WHOLE WITHOUT THE WRITTEN PERMISSION OF EBBE AMERICA IS PROHIBITED. ebbe-america.com/patent

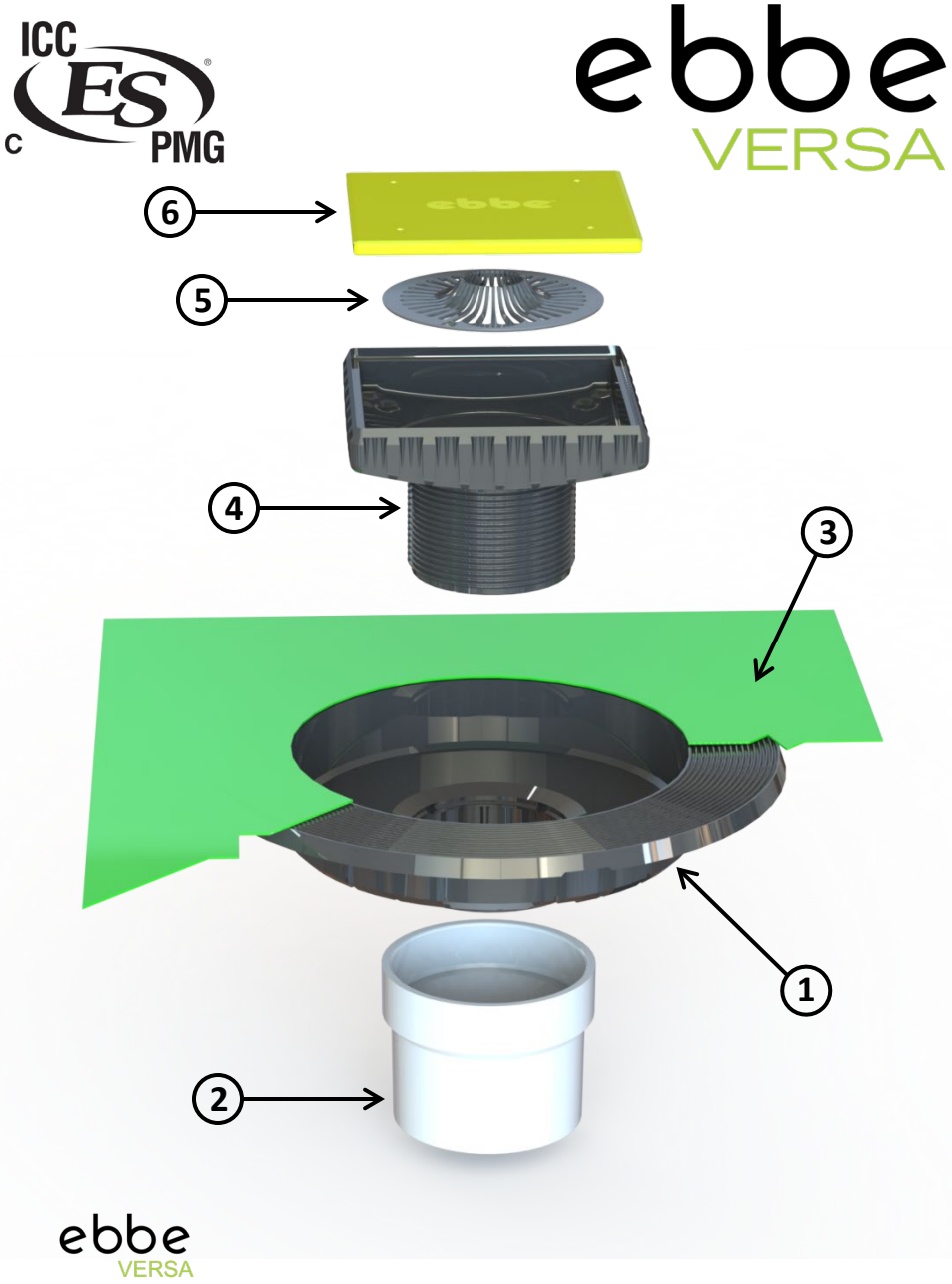

E4028 Ebbe VERSA-PVC Drain Kit

Item #	Description	Material
1	ABS Bonding Flange	ABS
2	PVC Pipe Connection	PVC
3	Bonded Waterproof fabric	PE
4	Ebbe Square Riser	ABS
5	Ebbe Hair Trap	PE
6	Construction Plug	ABS

Waterproofing Fabric not shown for clarity.

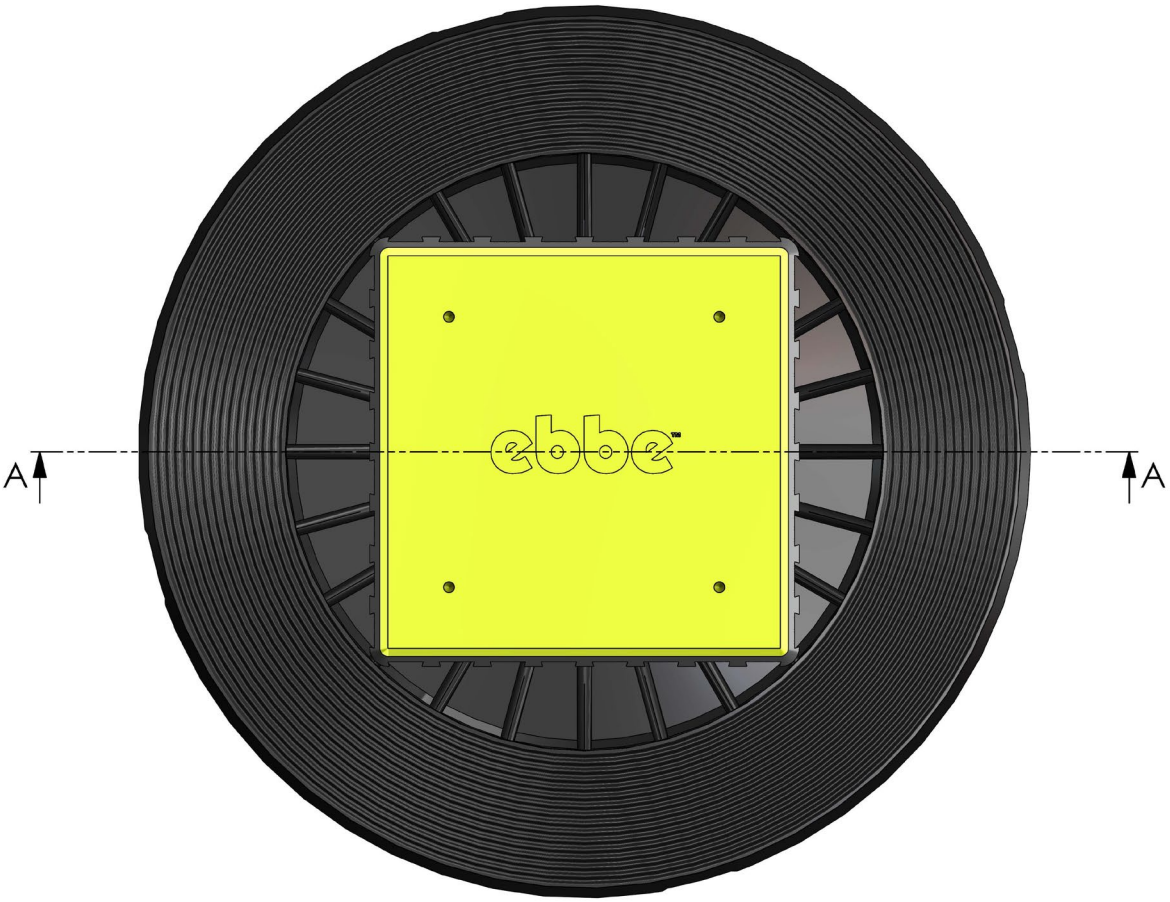

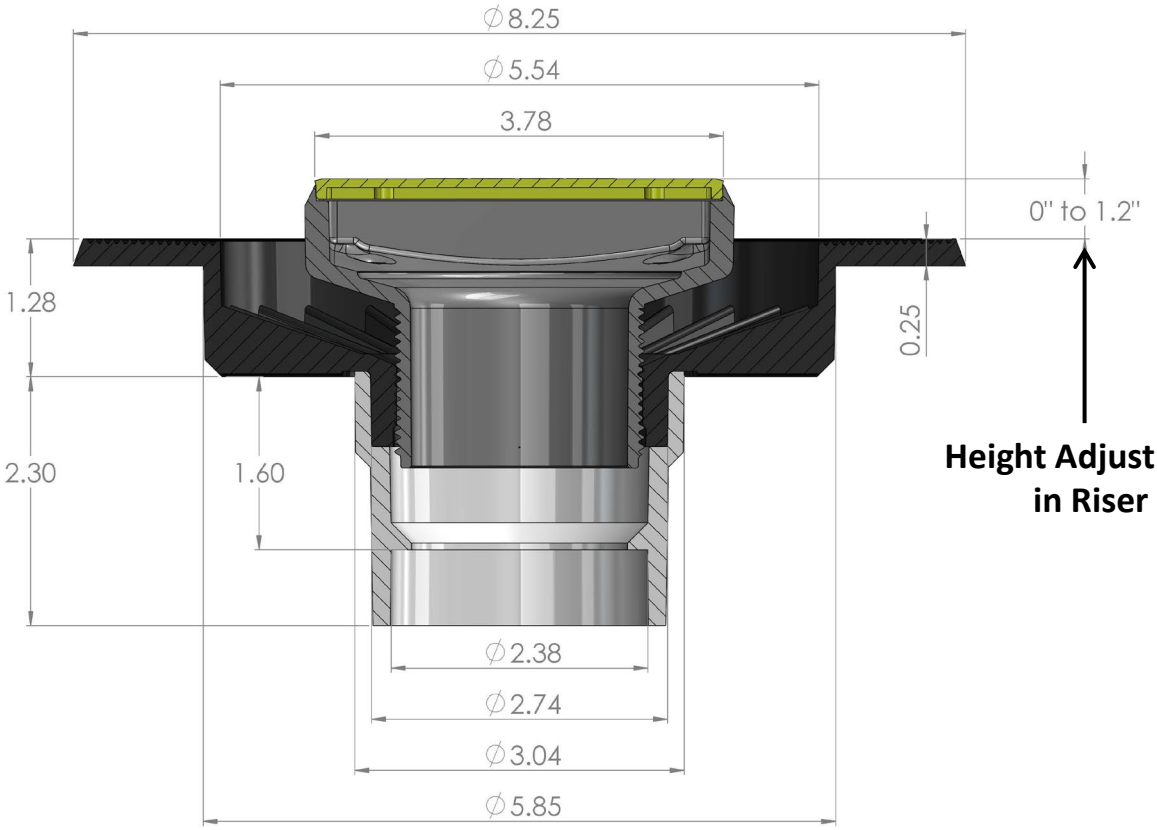

Height Adjustment in Riser

ebbe
VERSA